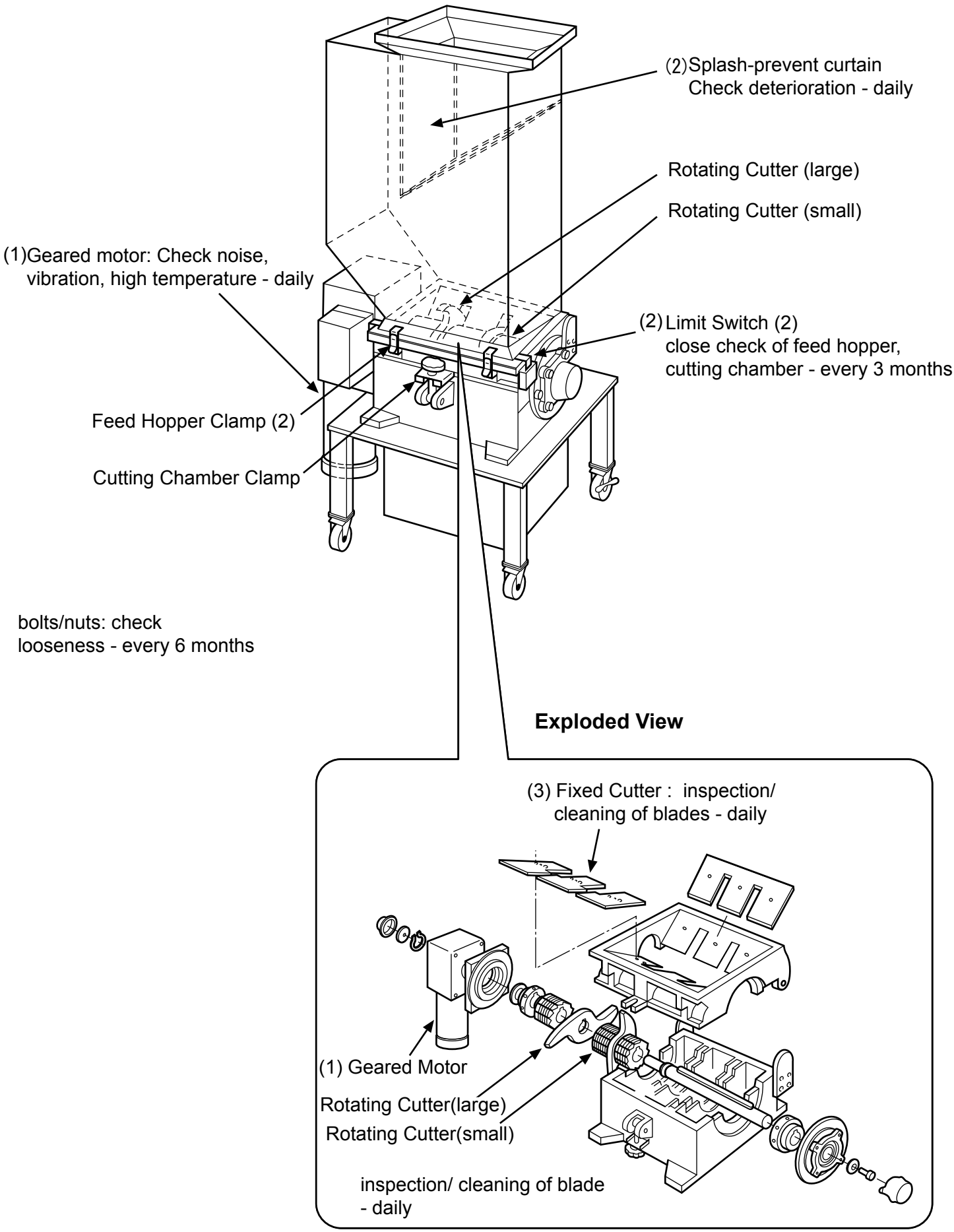Granulator (SMGL) Maintenance Inspections